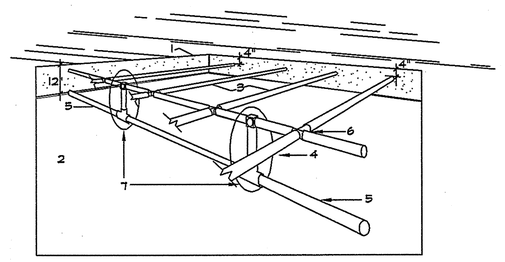

1- FINISH GRADE.
2- COMPACTED SUBGRADE.
3- DL2000 DRIPPER LINE WITH 4" COVER.
4- DL2000 BLANK TUBING.
5- PVC HEADER WITH 12" COVER.
6- INSERT TEE OR CROSS - TYP.
7- START CONNECTION -TYP. SEE OTHER DETAIL.

NOTE:
A. SEE PLANS AND LEGEND FOR ALL DIMENSIONS AND DRIP-LINE SPACING.
B. RATIO OF LATERALS TO START CONNECTIONS IS SHOWN AT 2:1, BUT MAY VARY PER HYDRAULIC DEMAND ON START CONNECTION - MAXIMUM RATIO 3:1.

V3 SUB-HEADER INSTALLATION

SECTION - NO SCALE

D_LT-150-TORO.dwg

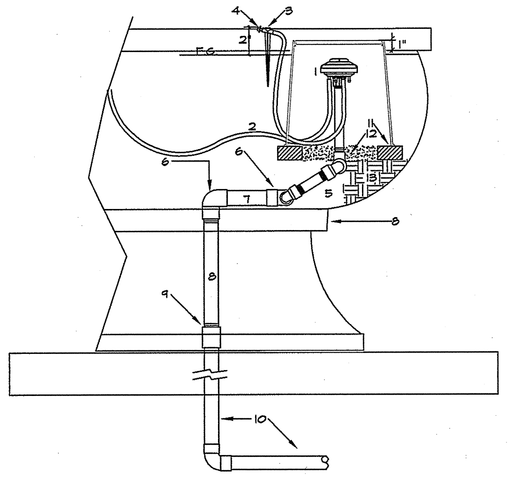

1- MULTI-OUTLET EMISSION DEVICE
2- 1/4-INCH VINL DISTRIBUTION TUBING, RAIN BIRD DT-025
3- 1/4 INCH TUBING STAKE RAIN BIRD TS-0.25
4- DIFFUSER BUG CAP, RAIN BIRD DBC-025
5- SWING JOINT ASSEM-SLY-2 MARLEX ST ELLS, 1 SCH 40 ELL-TT, 1 SCH 80 NIPPLE.
6- PVC SCH 40 TEE-SST OR EL-ST
7- PVC LATERAL LINE AT BASE OF POT
8- FLEX RISER -NIPT X NIPT
9- COPPER SWEAT FEMALE ADAPTER
10- 1/2" TYPE K COPPER LINE AND SWEAT FITTINGS UNDER CONCRETE SLAB.
11- BRICK SUPPORT-2 TIMES
12- PEA GRAVEL SUMP-3" DEEP.
13- UNDISTURBED OR COMPACTED SUB-GRADE.

W DRIP EMITTER IN TERRA-COTTA BOWL

SECTION - NO SCALE

D_MLT-EMIT-POT.dwg

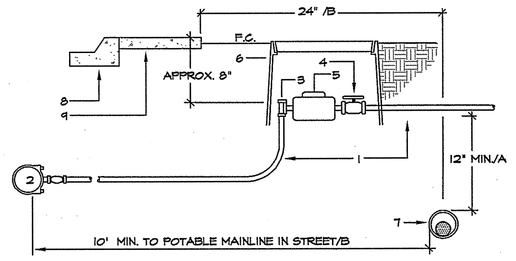

1- POTABLE SERVICE LINE.
2-POTABLE MAIN DISTRIBUTION LINE.
3-ANGLE METER STOP.
4-BRONZE BALL VALVE.
5-POTABLE WATER METER.
6- METER BOX
7- RECYCLED WATER IRRIGATION MAINLINE W/ SLEEVE.
8- CURB AND GUTTER.
9- SIDEWALK.

NOTE:

A. VERTICAL CLEARANCE OF 12" MIN. IS MANDATORY WHEN CROSSING PATH OF A POTABLE WATER LINE.
B. INSTALLATION OF RECYCLED WATER IRRIGATION MAINLINE MUST ALSO PROVIDE THE NECESSARY 10' HORIZONTAL CLEARANCE FROM POTABLE MAINLINE IN STREET.

X POTABLE SERVICE LINE CROSSING

SECTION - NO SCALE

POC_RW_POTSERV-X.dwg

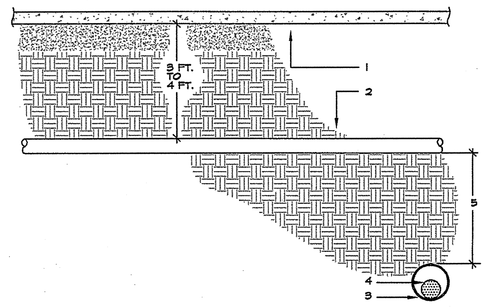

1- STREET SURFACE.
2- POTABLE MAINLINE (SEE IMPROVEMENT DRAWINGS).
3- SLEEVE.
4- RECYCLED WATER IRRIGATION MAINLINE.
5- 12" MINIMUM REQUIRED VERTICAL SEPERATION.

NOTE:

A. ALL RECYCLED WATER IRRIGATION PIPE AND SLEEVES SHALL BE PURPLE AS SPECIFIED.

Y POTABLE MAINLINE CROSSING

SECTION - NO SCALE

POC_RW_POT-X.dwg

SADDLEBACK COLLEGE

gkworks
2355 Main Street Suite 220
Irvine | CA 92614
949 250 1500
949 955 2708 fax

Architect Seal

LICENSED ARCHITECT
MATTHEW S. GREINER
C-21137
RENEWAL DATE 10-31-09
STATE OF CALIFORNIA

Consultant and Seal

FONG HART SCHNEIDER + PARTNERS
Landscape Architecture . Planning . Urban Design
930 W. 16th Street, A2
Costa Mesa, California
92627-4337
Tel: 949 645 9444
Fax: 949 645 1605

REGISTERED LANDSCAPE ARCHITECT
DAVID E. SCHNEIDER
No. 3367
RDN. 3-31-07
STATE OF CALIFORNIA

Agency Approval

IDENTIFICATION STAMP
DIV. OF THE STATE ARCHITECT
APPL. # 04-109129
AC. RS SN SS TB
DATE MAY 07 2008

No.	Date	Revision/Issue
	11/01/07	DSA Submittal #1

Project Name

JAMES B. UTT MEMORIAL LEARNING RESOURCE CENTER RENOVATION

28000 Marguerite Parkway
Mission Viejo, California 92692

Checked By | Drawn By

Sheet Title

LANDSCAPE IRRIGATION DETAILS

L-2.04

Project Number: 04-111
Scale: NONE

© 2008 gkworks, All Rights Reserved
NO PART OF THE CONTENTS OF THIS DOCUMENT MAY BE REPRODUCED OR TRANSMITTED IN ANY FORM OR BY ANY MEANS WITHOUT THE WRITTEN PERMISSION OF GKWORKS.

T:\da--saddleback\fhsp\cds\sheets\fhsp--sbc--L204.dwg 03/31/2008

OR531777--51697 P1 S2 - R C CONSTRUCTION SERVICES - PG 014 OF 235 (P1 S2) 1 SET.1IF - 2/3/2010 - 15:34