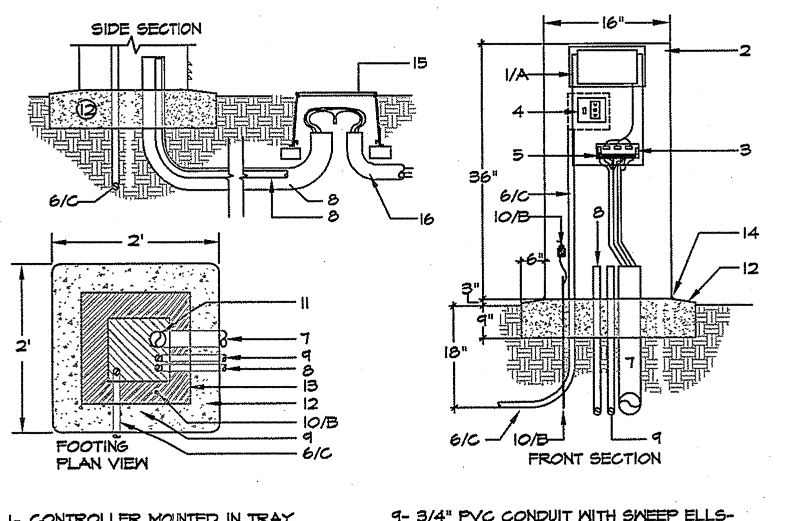

1- CONTROLLER MOUNTED IN TRAY.
2- TOP ENTRY, ENCLOSURE
3- CONTROLLER OPTIONS
4- POWER SWITCH/GFI RECEPTACLE.
5- TERMINAL STRIP.
6- 3/4" PVC CONDUIT FOR 120 VAC FROM METERED POWER SOURCE
7- PVC CONDUIT WITH SWEEP ELLS- FOR CONTROL WIRES, SIZE AS REQUIRED- 1-1/4" MINIMUM.
8- 1" PVC CONDUIT WITH SWEEP ELLS- FOR FLOW SENSOR CABLE-AEF 9516-2SP.
9- 3/4" PVC CONDUIT WITH SWEEP ELLS- #14 WIRES TO MASTER CONTROL VALVE.
10- 5/8"DIA. x 8' GROUND ROD W/ #10 GROUND WIRE & CLAMP.
11- FILL VOIDS WITH EXPANDABLE FOAM.
12- POURED CONCRETE BASE/FOOTING.
13- ENCLOSURE FOOTPRINT.
14- SEALANT AT ENCLOSURE BASE.
15- SEE PULL BOX DETAIL.
16- DIRECT BURIAL CONTROL WIRES IN CONDUIT ON CONTINUED RUN TO REMOTE CONTROL VALVES.

NOTE:
A. DETAIL FOR ILLUSTRATION OF GENERAL CONDITIONS ONLY. CONTROLLER ASSEMBLY SHALL BE COMPLETED WITH SPECIFIED OPTIONS BY UNITED GREENTECH. NEMA 3R RAINPROOF (UL LISTED).
B. CONTRACTOR SHALL FOLLOW MANUFACTURERS INSTRUCTIONS FOR MOUNTING & GROUNDING. POWER SHALL BE PROVIDED BY OTHERS (SEE ELECTRICAL AND/OR ARCHITECTURAL DRAWINGS).
C. THE CONTRACTOR SHALL BE RESPONSIBLE FOR CONNECTION OF POWER TO THE CONTROLLER IN COMPLIANCE TO ALL GOVERNING CODES.

B — CONTROLLER WITH STAINLESS STEEL ENCLOSURE — SECTION - NO SCALE
C_TOP-ENCL-CON.dwg

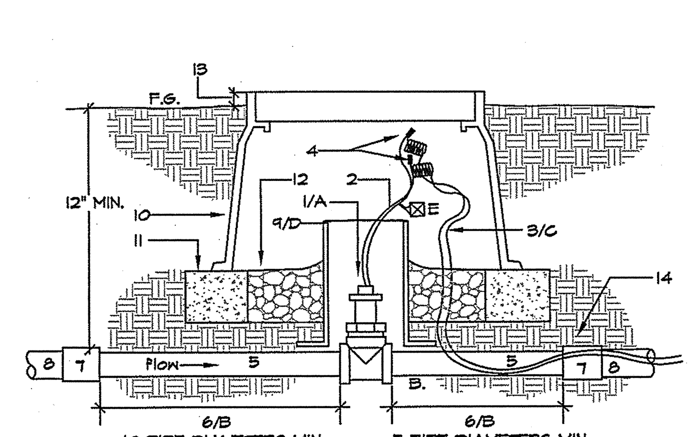

1- FLOW SENSOR
2- SENSOR WIRE LEADS
3- COMMUNICATION CABLE- COIL W/ 4" EXTRA WIRE.
4- WATER PROOF CONNECTORS.
5- PVC PRESSURE MAIN SIZED EQUAL TO SENSOR FOR REQUIRED LENGTH.
6- REQUIRED DISTANCE FROM ANY FITTING OR HARDWARE.
7- REDUCING FITTING OR HARDWARE.
8- PVC PRESSURE MAIN SIZED PER PLAN.
9- 8" PVC CLASS 315 ACCESS SLEEVE.
10- RECTANGULAR VALVE BOX
11- BRICK OR BLOCK SUPPORTS- ONE AT EACH CORNER
12- PEA GRAVEL SUMP 3" DEEP.
13- AT FINISH GRADE IN TURF, 1" IN SHRUB AREA.
14- UNDISTURBED OR COMPACTED SUBGRADE.

NOTE:
A. FOLLOW MANUFACTURERS DIRECTIONS FOR CORRECT INSTALLATION.
B. NO SIZE OR DIRECTION CHANGE WITHIN 10x PIPE DIAMETER UPSTREAM AND 5x PIPE DIAMETER DOWNSTREAM OF SENSOR.
C. COMMUNICATION CABLE SHALL BE TWO CONDUCTOR, SHEILDED CABLE AEF 9516-2SP CONNECTION TO TRANSMITTER.
D. ACCESS SLEEVE FLARED-OUT TO SIT ON PVC PRESSURE PIPE.
E. R. W. WARNING TAG PER SPECIFICATIONS.

D — FLOW SENSOR — SECTION - NO SCALE

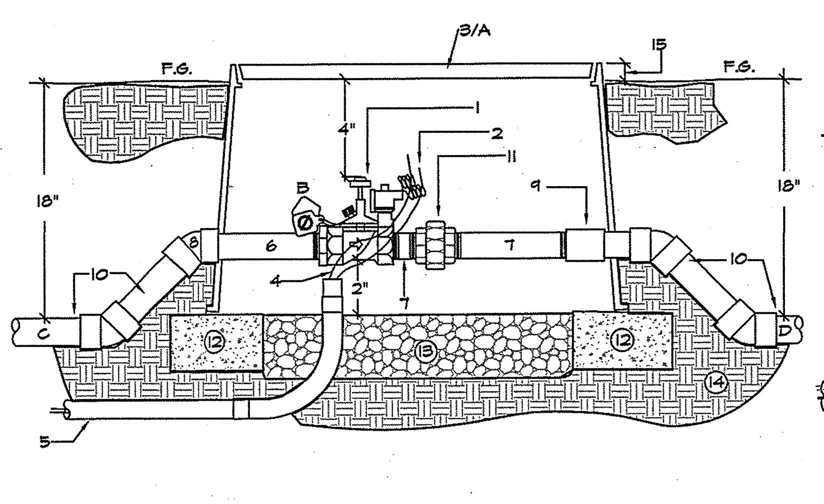

1- MASTER CONTROL VALVE.
2- WATERPROOF WIRE SPLICE.
3- 14"X20" RECT. JMBO VALVE BOX. W/PURPLE LOCKING LID
4- CONTROL WIRES- STATION WIRE AND COMMON
5- PVC SCH 40 ELECT. CONDUIT FROM PULL BOX OR CONTROLLER/SATELLITE.
6- PVC SCH 80 NIPPLE -TOE- L.A.R.
7- PVC SCH 80 NIPPLE -TBE- L.A.R.
8- PVC SCH 80 45DEG. ELL -TYP 4X.
9- PVC SCH 80 FEMALE ADAPTER.
10- PVC PRESSURE PIPE FOR MCV
11- PVC SCH 80 UNION -VALVE SIZE- WITH REDUCING BUSHING IF REQUIRED.
12- BRICK OR CONCRETE SUPPORTS- ONE AT EACH CORNER
13- PEA GRAVEL SUMP, 3" DEEP MIN.
14- UNDISTURBED/COMPACTED SUBGRADE.
15- FLUSH IN TURF, 1" IN GROUNDCOVER.

NOTES:
A. VALVE BOX LID SHALL BE BRANDED AS SHOWN IN VALVE BOX INSTALLATION AND IDENTIFICATION DETAIL DRAWING. IF USING R.W. WATER, BOX SHALL BE PURPLE WITH PURPLE LOCKING LID.
B. CONTRACTOR SHALL INCLUDE A CHRISTY'S R.W. WARNING TAG AND IRRIGATION I.D. TAG INDICATING CONTROLLER AND MASTER CONTROL VALVE. TAGS SHALL BE ATTACHED TO VALVE BONNET BOLT.
C. MAINLINE FROM TEST STATION.
D. MAINLINE TO FLOW SENSOR.

E — MASTER CONTROL VALVE — SECTION - NO SCALE
V_MCV-CON-RW.DWG

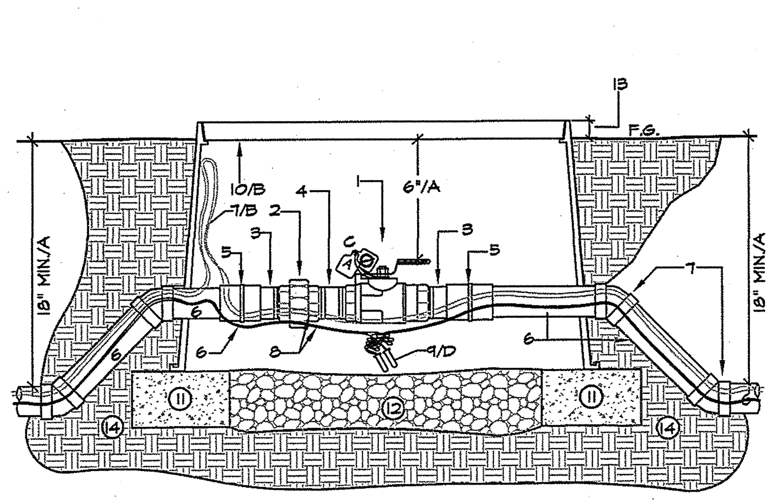

1- BALL VALVE WITH INTEGRAL UNION.
2- BRASS UNION - VALVE SIZE.
3- PVC SCH 80 NIPPLE - T.O.E.
4- PVC SCH 80 NIPPLE - T.B.E.
5- PVC SCH 80 COUPLING.
6- PVC PRESSURE MAIN - TYP.
7- PVC SCH 80 45 DEGREE ELLS - TYP. 4 PLACES.
8- CONTROL WIRES WITH SPARE STATION WIRES LOOPED INTO EACH ISOLATION VALVE BOX ON RUN.
9- WIRE SPLICE - 3M DBY. IF REQUIRED- MUST BE WITHIN VALVE BOX.
10- VALVE BOX. W/ PURPLE LOCKING LID.
11- BRICK OR BLOCK SUPPORTS - 1 EA. CORNER.
12- PEA GRAVEL SUMP 3" DEEP.
13- AT FINISH GRADE IN TURF, 1" IN SHRUB AREA
14- UNDISTURBED OR COMPACTED SUBGRADE.

NOTE:
A. 4-45 DEGREE PVC SCH 80 ELBOW FITTINGS SHALL BE USED TO RAISE BALL HANDLE TO WITHIN 6" OF FINISH GRADE.
B. VALVE BOX LID SHALL BE BRANDED TO IDENTIFY VALVE.
C. R.W. WARNING TAG AS SPECIFIED AND CONTROLLER I.D.TAG.
D. SPLICING WITH APPROVAL OF OWNER REP.

F — BALL VALVE FOR MAINLINE ISOLATION — SECTION - NO SCALE
V_BV-BR-MAIN-ISO-RW.dwg

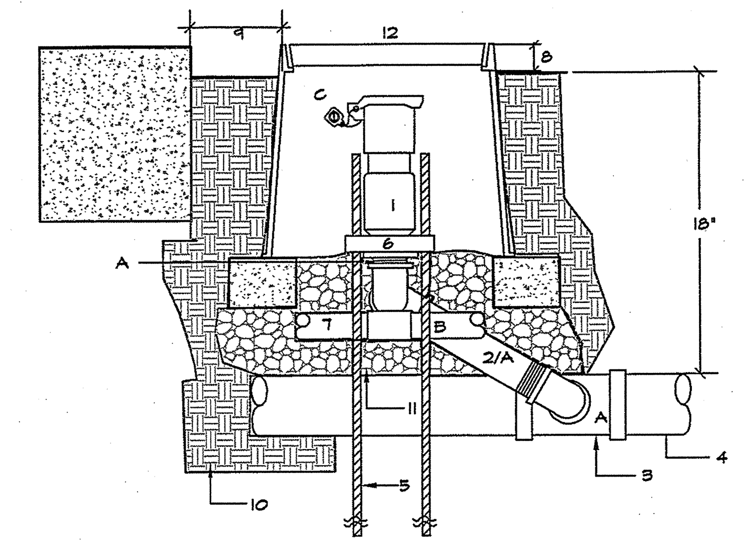

1- QUICK COUPLER VALVE W/PURPLE LOCKING CAP.
2- DURA O-RING SEALED SWING JOINT. Q.C. STANDARD UNIBODY #1"-A2 1 11 18
3- PVC TEE-SSS OR EL-SS ON PRESSURE MAINLINE
4- PVC PRESSURE MAINLINE
5- #4 REBAR STAKE 24" LONG
6- QUICK LOCK-VERTICAL SUPPORT
7- HORIZONTAL STABILIZER
8- FLUSH IN TURF; 1" IN IN SHRUB AREA.
9- 12" FROM WALKS, CURBS OR WALLS.
10- UNDISTURBED/COMPACTED SUBGRADE.
11- PEA GRAVEL SUMP WITHIN BOX
12- VALVE BOX W/PURPLE LOCKING LID.

NOTE:
A. FOR 3/4" Q.C. USE 1"X3/4" REDUCING BUSHING
B. 1"X18" CL 315 PVC THROUGH HORIZONTAL STABILIZER
C. R.W. WARNING LOCKING TAG AND PURPLE COVER.
D. QUICK COUPLER VALVE SHALL BE OF A TYPE APPROVED FOR RECYCLED WATER USE.

G — QUICK COUPLER VALVE — SECTION - NO SCALE
V_QCV-SJ-BOX-RW.dwg

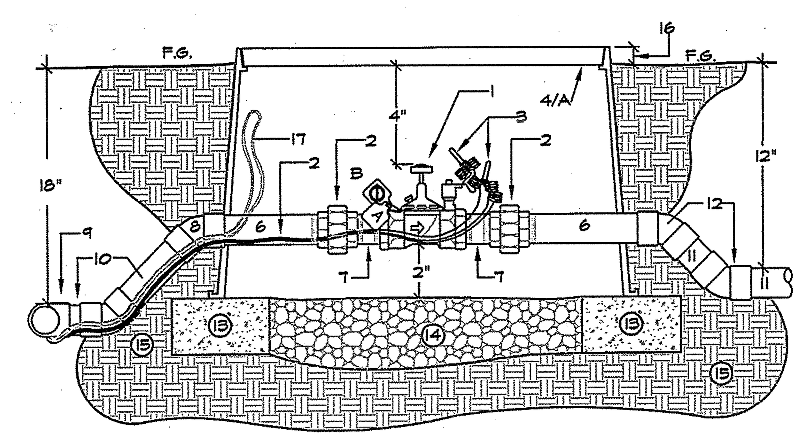

1- REMOTE CONTROL VALVE.
2- PVC SCH 80 UNION -VALVE SIZE- WITH REDUCING BUSHING IF REQUIRED.
3- WATERPROOF WIRE SPLICE- 3M DBY OR EQUAL.
4- VALVE BOX W LOCKING PURPLE LID.
5- CONTROL WIRES- STATION AND COMMON.
6- PVC SCH 80 NIPPLE -T.O.E.- L.A.R.
7- PVC SCH 80 NIPPLE -T.B.E.- L.A.R.
8- PVC SCH 80 45 DEG. ELL -TYP. 2X.
9- PVC SCH 80 TEE OR ELL ON MAINLINE OR MANIFOLD.
10- PVC PRESSURE PIPE.
11- PVC NON-PRESSURE PIPE.
12- PVC SCH 40 45 DEG. ELL -TYP. 2X.
13- BRICK OR CONCRETE SUPPORTS- ONE AT EACH CORNER.
14- PEA GRAVEL SUMP, 3" DEEP MIN.
15- UNDISTURBED/COMPACTED SUBGRADE.
16- FLUSH IN TURF, 1" IN GROUNDCOVER.
17- SPARE STATION WIRES LOOPED INTO EACH VALVE BOX ON RUN.

NOTES:
A. VALVE BOX LID SHALL BE BRANDED AS SHOWN IN VALVE BOX INSTALLATION AND IDENTIFICATION DETAIL DRAWING.
B. CONTRACTOR SHALL INCLUDE A CHRISTY'S R.W. WARNING TAG AND IRRIGATION I.D. TAG INDICATING CONTROLLER AND STATION NUMBER. TAGS SHALL BE ATTACHED TO VALVE BONNET BOLT.

H — REMOTE CONTROL VALVE — SECTION - NO SCALE
V_RCV-RW.dwg

THE PROJECT
1. THIS PROJECT INCLUDES MANY SMALL PLANTING AREAS ADJACENT TO BUILDINGS, PEDESTRIAN WALKS AND ASPHALT PAVING. IN THE INTEREST OF PUBLIC SAFETY, PROPERTY PRESERVATION AND WATER CONSERVATION IRRIGATION METHODS IN THESE AREAS EMPLOY TECHNIQUES AND EQUIPMENT TO CONTROL THE 'RADIUS-OF-THROW' OF SHORT RADIUS SPRINKLERS. IN SOME LANDSCAPE AREAS DRIP IRRIGATION METHODS AND EQUIPMENT ARE USED.

2. ALL IRRIGATION SYSTEMS DESCRIBED BY THESE PLANS ARE INTENDED FOR USE OF RECYCLED WATER. ALL SYSTEMS INTENDED FOR RECYCLED WATER DISTRIBUTION SHALL BE INSTALLED ACCORDING TO THE RULES AND REGULATIONS OF LOCAL GOVERNING AGENCIES. WHILE THESE SYSTEMS ARE TO BE SERVED WITH RECYCLED WATER ALL IRRIGATION INSTALLATIONS SHALL BE DOWNSTREAM OF AN APPROVED REDUCED PRESSURE TYPE BACKFLOW PREVENTION DEVICE. THE CONTRACTOR SHALL VERIFY THAT ALL CONNECTIONS ARE DOWNSTREAM OF A REDUCED PRESSURE TYPE BACKFLOW PREVENTION DEVICE. BACKFLOW PREVENTION DEVICE SHALL BE TESTED BY A CERTIFIED TECHNICIAN AT THE EXPENSE OF THE CONTRACTOR. TEST CERTIFICATION SHALL BE DOCUMENTED WITH THE LANDSCAPE ARCHITECT.

4. USE OR FUTURE POTENTIAL USE OF RECYCLED WATER REQUIRES THAT ALL PIPE, SLEEVES, SPRINKLER HEADS, REMOTE CONTROL VALVES, QUICK COUPLER VALVES AND VALVE BOXES BE IDENTIFIED AS CONTAINING RECYCLED WATER. ALL INSTALLATIONS SHALL BE ACCORDING TO REQUIREMENTS OF THE SERVING WATER DISTRICT AND ALL OTHER CODES AND ORDINANCES AFFECTING CONSTRUCTION WITH OR USE OF RECYCLED WATER.

5. INSTALLATION OF DRIP IRRIGATION REQUIRES THE CONTRACTOR TO OBTAIN TECHNICAL ASSISTANCE FROM THE IRRIGATION MANUFACTURER, THE LANDSCAPE ARCHITECT AND/OR THE IRRIGATION CONSULTANT. A PRE-CONSTRUCTION MEETING WITH THE MANUFACTURER AND LANDSCAPE ARCHITECT AND SITE OBSERVATIONS PRIOR TO BACKFILL OF DRIP SYSTEMS IS MANDATORY.

6. IT IS THE RESPONSIBILITY OF THE LANDSCAPE CONTRACTOR TO ARRANGE FOR AND SCHEDULE THE PRE-CONSTRUCTION MEETING AND ADHERE TO THE SPECIFICATIONS REGARDING THE SCHEDULE OF SITE OBSERVATIONS.

7. UNOBSERVED, UNPROVED, INADEQUATE INSTALLATIONS ARE THE SOLE RESPONSIBILITY OF THE INSTALLING CONTRACTOR AND WILL BE SUBJECT TO REMOVAL AND REINSTALLATION WITH NEW MATERIAL AT NO ADDITIONAL COST TO THE BUILDER/OWNER.

8. THE CONTRACTOR SHALL BE RESPONSIBLE FOR ANY AND ALL RECONNAISSANCE WORK REQUIRED TO COMPLETE THE INTENT OF THE DRAWINGS. TO INTERFACE WITH ALL EXISTING CONDITIONS THE CONTRACTOR MUST BECOME VERY FAMILIAR WITH THESE CONDITIONS. THE CONTRACTOR SHALL COORDINATE ALL WORK AFFECTED BY EXISTING CONDITIONS WITH APPROPRIATE ON-SITE PERSONNEL.

9. ALL LOCAL, MUNICIPAL AND STATE LAWS, RULES AND REGULATIONS GOVERNING OR RELATING TO ANY PORTION OF WORK DESCRIBED AND/OR DIRECTED BY THESE DRAWINGS ARE HEREBY INCORPORATED INTO AND MADE A PART OF THESE SPECIFICATIONS. THE CONTRACTOR SHALL PERFORM WORK ACCORDING TO PROVISIONS OF ALL GOVERNING LOCAL, MUNICIPAL AND STATE LAWS, RULES AND REGULATIONS.

10. THE CONTRACTOR SHALL OBTAIN, STUDY AND COORDINATE ALL PERTINENT ENGINEERING AND/OR ARCHITECTURAL PLANS AND SPECIFICATION AND COORDINATE WITH WORK DESCRIBED BY THESE PLANS.

11. THE CONTRACTOR SHALL OBTAIN ALL NECESSARY PERMITS REQUIRED TO PERFORM WORK DESCRIBED BY THESE PLANS BEFORE BEGINNING WORK.

12. IRRIGATION PLANS ARE DIAGRAMMATIC. ALL EQUIPMENT SHOWN IN PAVED AREAS OR WITHIN BUILDINGS ID FOR CLARITY OF PLANS ONLY. ALL INSTALLATION DIRECTED BY THESE PLANS SHALL BE WITHIN PLANTING AREAS.

WATER SOURCE
1. METER AND SERVICE SHALL BE PROVIDED BY OTHERS.
SYSTEM P.O.C.'S SHALL DOWNSTREAM OF THE DEDICATED IRRIGATION WATER METER. THE CONTRACTOR SHALL CONNECT TO THE DOWNSTREAM SIDE OF THE METER AND EXTEND THE SYSTEM AS SHOWN. THESE SYSTEMS ARE INTENDED TO BE SERVED WITH RECYCLED WATER AND MUST BE INSTALLED ACCORDING TO THE RULES AND REGULATIONS ESTABLISHED BY LOCAL AND STATE AGENCIES GOVERNING USE OF THIS RESOURCE.

2. EXISTING STATIC PRESSURE AT POINTS OF CONNECTION SHALL BE APPROXIMATELY 75 PSI. THIS INFORMATION WAS OBTAINED FROM THE

3. THE IRRIGATION SYSTEM IS DESIGNED TO OPERATE AT 30 TO 40 PSI. APPROXIMATELY 79 PSI IS REQUIRED AT THE POINT OF CONNECTION.

4. THE CONTRACTOR SHALL VERIFY THE WATER PRESSURE IN THE FIELD PRIOR TO PURCHASE OF ANY EQUIPMENT AND PERFORMING ANY INSTALLATIONS. IF THE PRESSURE IS NOT AS STATED ABOVE, THE CONTRACTOR SHALL CONTACT THE LANDSCAPE ARCHITECT FOR INSTRUCTIONS BEFORE PROCEEDING. PROCUREMENT AND/OR INSTALLATION OF ANY IRRIGATION EQUIPMENT WITHOUT VERIFICATION OF SATISFACTORY WATER PRESSURE SHALL BE AT THE SOLE RESPONSIBILITY OF THE CONTRACTOR.

GENERAL
1. PLANS ARE DEVELOPED OVER BASE INFORMATION PROVIDED BY THE LANDSCAPE ARCHITECT AND CIVIL ENGINEER. THE DRAWINGS ARE DIAGRAMMATIC. THE SCALE OF THE PLANS SOMETIMES MAKES IT NECESSARY TO SHOW IRRIGATION PIPELINES WITHIN THE BUILDINGS, WALKS OR OTHERWISE OUTSIDE OF THE PLANTING AREAS. THIS IS ONLY FOR CLARITY OF THE PLANS. ALL IRRIGATION EQUIPMENT SHALL BE INSTALLED IN PLANTER AREAS WHEREVER POSSIBLE. IN THE FOLLOWING PLANS THE IRRIGATION MAINLINE IS OFTEN SHOWN IN THE WALKWAY. IT IS TO BE INSTALLED 12" TO 18" FROM FACE OF WALKWAY WITHIN THE PLANTING AREA. ALTHOUGH VALVE LOCATIONS ARE SHOWN DIAGRAMMATIC ALLY, THEY ARE INTENDED TO BE INSTALLED OUT OF SIGHT. LOCATION OF ALL VALVE ASSEMBLIES WITH VALVE BOXES SHALL BE STAKED FOR APPROVAL BY LANDSCAPE ARCHITECT PRIOR TO INSTALLATION.

2. UNLESS OTHERWISE SPECIFIED ON THE PLANS:
* ALL LATERAL END RUNS ARE TO BE 3/4"
* ALL SUB-MAINS (NON-PRESSURE LINE CONNECTED DIRECTLY DOWNSTREAM OF THE REMOTE CONTROL VALVE) SHALL BE ONE SIZE LARGER THAN THAT REMOTE CONTROL VALVE.
* MAINLINE END RUNS ARE TO BE 1 1/2".
* ALL PIPE SHALL BE DOWN SIZED IN DIRECTION OF FLOW ONLY.

3. THIS PROJECT INCLUDES VERY CONFINED PLANTING AREAS. OVER-SPRAY IS NOT ACCEPTABLE. THE CONTRACTOR SHALL UTILIZE PRESSURE COMPENSATING SCREENS WHERE SPECIFIED, NOTED ON THE DRAWINGS OR WHERE NECESSARY AND ADJUST RADIUS OF SPRAY TO PREVENT OVER-SPRAY BEYOND INTENDED AREAS OF COVERAGE.

4. THE CONTRACTOR SHALL NOT INSTALL THE IRRIGATION SYSTEM AS SHOWN ON THE PLANS WHEN IT IS OBVIOUS THAT FIELD CONDITIONS SUCH AS OBSTRUCTIONS, GRADING DIFFERENCES OR DIFFERENCES IN SIZE AND SHAPE OF THE PLANTED AREAS MAY NOT HAVE BEEN ACCOMMODATED IN THE ORIGINAL DESIGN. THE CONTRACTOR SHALL NOTIFY THE LANDSCAPE ARCHITECT OF SUCH CHANGE IN FIELD CONDITIONS. IF NOTIFICATION IS NOT PERFORMED, THE CONTRACTOR SHALL BE FULLY RESPONSIBLE FOR THE INSTALLATION AND FOR ANY NEED OF SUBSEQUENT REVISIONS.

6. ALL EQUIPMENT SHALL BE INSTALLED AS DETAILED. USE TEFLON TAPE ON MALE THREADS OF ALL THREADED CONNECTIONS.

7. ALL SPRINKLER HEADS ADJACENT TO PEDESTRIAN WALKS, CURBS, ROADS, IN AND ADJACENT TO TURF AREAS SHALL BE POP/UP TYPE SPRINKLERS AS LISTED IN THE LEGEND AND AS INDICATED ON THE PLANS.

8. ALL SPRINKLER HEADS SHALL BE SET PERPENDICULAR TO FINISH GRADE, WITH THE EXCEPTION OF SLOPE CONDITIONS WHERE HEAD SHALL BE SET BETWEEN PLUMB AND NORMAL TO SLOPE. ALL SPRINKLER HEADS SHALL BE SET AT HEIGHT AS SHOWN IN THE DETAIL DRAWINGS.

9. IN CASE OF POSSIBLE CONTROL WIRE FAILURE THE CONTRACTOR SHALL INSTALL TWO SPARE CONTROL WIRES FROM THE CONTROLLER TO THE FARTHEST VALVE ON EACH LEG OF THE MAINLINE. THESE WIRES SHALL PASS THROUGH ALL VALVE BOXES ALONG THE MAINLINE ROUTE. THESE WIRES SHALL BE A DIFFERENT COLOR FROM OTHER CONTROL WIRES AND BE LABELED AS SPARE AT THE CONTROLLER CABINET, IN THE VALVE BOX OF THE FARTHEST VALVE AND ALL OTHER VALVE BOXES. SEE SUPPLEMENTAL SPECIFICATIONS.

10. CONTRACTOR SHALL VERIFY LOCATION OF ALL UNDERGROUND UTILITIES WITHIN WORK AREA PRIOR TO START OF CONSTRUCTION. AT LEAST TWO WORKING DAYS PRIOR TO EXCAVATION, THE CONTRACTOR SHALL REQUEST MARK OUT OF UNDERGROUND UTILITIES BY CALLING THE REGIONAL NOTIFICATION CENTER FOR AN INQUIRY IDENTIFICATION NUMBER.
THE CONTRACTOR SHALL ALSO REFER TO ALL OTHER IMPROVEMENT PLANS FOR THIS PROJECT FOR UTILITY LOCATIONS.

MEANS AND METHODS
IRRESPECTIVE OF ANY OTHER TERM IN THESE CONSTRUCTION DOCUMENTS, THE IRRIGATION CONSULTANT SHALL NOT CONTROL OR BE RESPONSIBLE FOR CONSTRUCTION MEANS, METHODS, TECHNIQUES, SCHEDULES, SEQUENCES OR PROCEDURES; OR FOR CONSTRUCTION SAFETY OR ANY OTHER RELATED PROGRAMS; OR FOR ANOTHER PARTIES' ERRORS OR OMISSIONS OR FOR ANOTHER PARTIES' FAILURE TO COMPLETE THEIR WORK OR SERVICES IN ACCORDANCE WITH IRRIGATION CONSULTANT'S DOCUMENTS.

PROJECT MAINTENANCE
A LACK OF MAINTENANCE OR IMPROPER MAINTENANCE IN AREAS SUCH AS OR ASSOCIATED WITH, BUT NOT LIMITED TO, LANDSCAPE PLANTING, HARDSCAPE, LIGHTING, GRADING, DRAINAGE, WATER FEATURES, FURNISHINGS, AND IRRIGATION OR WATER MANAGEMENT WHETHER ASSOCIATED WITH THE PROJECT OR NOT MAY RESULT IN DAMAGE TO PROPERTY OR PERSONS.
THE CONTRACTOR ACKNOWLEDGES AND AGREES THAT PROPER PROJECT MAINTENANCE IS REQUIRED AFTER THE PROJECT IS COMPLETE AND TO INFORM THE OWNER OF HIS/HER SOLE RESPONSIBLE FOR THE RESULTS OF ANY LACK OF MAINTENANCE OR IMPROPER MAINTENANCE.

IRRIGATION EQUIPMENT LEGEND

SYMBOL	DESCRIPTION	MANUFACTURER / MODEL	REMARKS	DETAIL
C	IRRIGATION CONTROLLER FOR CONTROL OF THE SITE	RAINBIRD ESP-MC WITH GREENTECH OPTIONS AS INDICATED BY MODEL NUMBER WITHIN STAINLESS STEEL ENCLOSURE	SEE PLAN SHEETS FOR MODEL NUMBER, STATION COUNT AND OPTIONS. CONTROLLER TO BE OBTAINED FROM AND ASSEMBLED BY GREEN TECH. (800) 427-0779. CONTRACTOR SHALL INSTALL PER MANUFACTURERS INSTRUCTIONS AND MAKE CONNECTIONS PER GOVERNING CODES AND ORDINANCE.	B
F	FLOW SENSOR	DATA INDUSTRIAL VB-JMBP AND VB-JMB-6EXT-B VALVE BOX	FOR USE WITH THE EMERGENCY SHUT-OFF FEATURES OF THE CONTROLLER ASSEMBLY (2"SIZE) SIZED AS NOTED ON THE PLAN SHEETS.	D,L
⊗	MASTER CONTROL VALVE WITH PRESSURE REGULATION	SUPERIOR 3100-RW-PRS WITHIN RAINBIRD VB-STDP VALVE BOX	NORMALLY OPEN PRESSURE REGULATING MASTER CONTROL VALVE FOR USE WITH THE FLOW SENSING AND HIGH FLOW SHUT-OFF CONTROLLER FEATURES.	E,L
⧓	BALL VALVE	WATTS WBV SERIES WITHIN RAINBIRD VB-STDP VALVE BOX	FOR MAINLINE ISSOLATION AND SECTIONAL SHUT-OFF. SIZE EQUAL TO PIPE SIZE; 2" MAXIMUM.	F,L
◕	REMOTE CONTROL VALVE (FOR OVERHEAD OR BUBBLER SYSTEMS)	RAINBIRD PESB SERIES WITHIN RAINBIRD VB-STDP VALVE BOX	ZONE CONTROL VALVE FOR OVERHEAD SYSTEMS SIZED AS SHOWN ON THE PLANS	H,K,L
●	REMOTE CONTROL VALVE ASSEMBLY- RCV WITH PRES. RED. VALVE AND SCREEN FILTER WITH BALL VALVE (FOR DRIP SYSTEMS)	RAINBIRD XCZ-100-B-COM OR XCZ-150-COM VB-JMBP AND VB-JMB-6EXT-B VALVE BOX	ZONE CONTROL VALVE ASSEMBLY FOR DRIP SYSTEMS. XCZ-100-B-COM FOR FLOWS TO 15 GPM. XCZ-150-COM FOR FLOWS 16 GPM TO 40 GPM -	I,J,K,L -
◑	QUICK COUPLER VALVE	NELSON 7644 AND 7641 KEY WITH 8812 SWIVEL WITHIN RAINBIRD VB-10RNDP VALVE BOX	INSTALL WITHIN 10" ROUND VALVE BOX APPROX. 150 TO 200 FT.O.C. WHERE SHOWN PROVIDE ONE KEY/SWIVEL ASSEMBLY FOR EACH 10 QCV'S INSTALLED.	G,L
NO SYMBOL	CONTROL WIRE	DIRECT BURIAL WIRE	14 GAUGE PILOT; 12 GAUGE COMMON	-
———	PVC MAINLINE PIPE (PURPLE FOR RECYCLED WATER)	PACIFIC PLASTICS 'CYCLE FLOW' OR EQUAL -	1" TO 2" PVC SCH 40; 2-1/2" AND LARGER PVC CLASS 315 SIZE AS SHOWN ON PLANS.	Y,N,O
———	PVC LATERAL LINE PIPE (PURPLE FOR RECYCLED WATER)	PACIFIC PLASTICS 'CYCLE FLOW' OR EQUAL -	PVC SCH 40. SIZE AS SHOWN ON PLANS. 3/4" MINIMUM SIZE.	X,N,O
———	PVC LATERAL LINE PIPE (PURPLE FOR RECYCLED WATER)	PACIFIC PLASTICS 'CYCLE FLOW' OR EQUAL -	PVC SCH 40 FOR DRIP SYSTEMS OF POTS ON SLAB. 3/4" MINIMUM SIZE. ALL PIPE TO INSTALLED AND PRESSURE TESTED BEFORE PLACEMENT OF CONCRETE	X,N,O
———	PVC SLEEVE (PURPLE FOR RECYCLED WATER)	PACIFIC PLASTICS 'CYCLE FLOW' OR EQUAL -	PVC SCH 40; TWO TIMES DIA. OF PIPE. (2" MIN.) -	O
NO SYMBOL	DRIP START CONNECTION	CONTRACTOR FABRICATED AS DETAILED	TRANSITION FROM PVC TO POLY DRIP LINES.	M,I
Ⓐ	AIR / VACUUM RELIEF VALVE	TORO YD-500-34	INSTALL ON COMMON MANIFOLD LOCATED AT HIGHEST LOCAL ELEVATION	T,L
▷	DRIP LINE FLUSH VALVE	NETAFIM TLO50MFV-1	WITHIN 10" ROUND VALVE BOX. INSTALL AT POLY LATERAL END OR PVC EXHAUST MANIFOLD APPROXIMATELY WHERE SHOWN.	U,L
- - - -	POLYETHYLENE DRIP LINE (PURPLE FOR RECYCLED WATER) CURVED OR STRAIGHT LINE SYMBOL	TORO DL 2000 RGP-212-10-E	DRIPLINE W/ PRE-INSERTED .5 GPH EMITTERS @ 18" O.C. LINE SPACED 18" O.C. SECURED WITH STAPLES 5' O.C. INSTALLED W/ 4" MIN. COVER.	S,V1,V2 V3,V4

IRRIGATION SPRINKLER HEAD LEGEND

SYMBOL 360°	VAN <180°	180°	VAN >180°	120°	90°	EST	SST	DESCRIPTION	MANUFACTURER / MODEL	PSI	RAD.	DISCHARGE (GPM) 360°	VAN <180°	180°	VAN >180°	120°	90°	EST	SST	DETAIL
■		■			□			POP-UP SPRAY HEAD (SHRUB)	RAINBIRD 1812 SAM-NP W/ 15 SERIES NOZ.	30	13' - 15'	3.70	VAR	1.85	VAR	1.23	0.93	0.65	1.20	P1
■		■			□			POP-UP SPRAY HEAD (SHRUB)	RAINBIRD 1812 SAM-NP W/ 12 SERIES NOZ.	30	11' - 12'	2.60	VAR	1.30	VAR	0.87	0.65			P1
■		■			□			POP-UP SPRAY HEAD (SHRUB)	RAINBIRD 1812 SAM-NP W/ 10 SERIES NOZ.	30	9' - 10'	1.60	VAR	0.80	VAR	0.52	0.39			P1
■		■			□			POP-UP SPRAY HEAD (SHRUB) (SHORT RADIUS)	RAINBIRD 1812 SAM-NP W/ 10 SERIES NOZ. & PCS 360° = PCS-090, 180° = PCS-040, 120° = PCS-030, 90° = PCS-020	30	6' - 8'	0.90		0.40		0.30	0.20			P1
■		■			.			POP-UP SPRAY HEAD (SHRUB) (SHORT RADIUS)	RAINBIRD 1812 SAM-NP W/ 8 SERIES NOZ. & PCS 360° = PCS-060, 180° = PCS-030, 120° = PCS-020, 90° = PCS-020	30	3' - 5'	0.60		0.30		0.20	0.20			P1

VALVE CALL-OUT SYMBOL DRIP SYSTEMS
CONTROLLER — STATION NUMBER — 7A8 / 11 / 1" / 8 — VALVE SIZE — VALVE DISCHARGE (GPM)

VALVE CALL-OUT SYMBOL OVERHEAD SYSTEMS
CONTROLLER — STATION NUMBER — INDICATES SIMULTANEOUS VALVE OPERATION — A216 / 3.51" — VALVE SIZE — (GPM) VALVE DISCHARGE

CONTROLS
1. SYSTEMS OF THIS PROJECT ARE CONTROLLED BY SOLID STATE IRRIGATION CONTROLLERS. THE CONTRACTOR SHALL EXERCISE STRICT COMPLIANCE WITH THE MANUFACTURERS' INSTRUCTIONS FOR PROPER GROUNDING, INSTALLATION AND USE.

2. CONTROLLER LOCATIONS ARE SHOWN DIAGRAMMATICALLY. FINAL LOCATION TO BE APPROVED BY THE OWNER'S REPRESENTATIVE. POWER FOR THE IRRIGATION CONTROLLERS SHALL BE PROVIDED BY THE OWNER; LOCATED APPROXIMATELY WHERE SHOWN ON THE DRAWINGS. THE CONTRACTOR SHALL BE RESPONSIBLE FOR INSTALLATION OF THE IRRIGATION CONTROLLERS AND CONNECTION TO THE POWER SOURCE IN COMPLIANCE WITH ALL GOVERNING CODES.

3. TO PREVENT UNNECESSARY IRRIGATION RAIN SENSING DEVICES ARE USED TO GIVE INDICATION OF SUBSTANTIAL RAINFALL.

FOR TECHNICAL ASSISTANCE CONTACT THE MANUFACTURERS REPRESENTATIVES AS FOLLOWS:
CONTROLLERS - GREEN TECH (800)-427-0779
SUBSURFACE DRIP IRRIGATION - TORO (800)-664-4740

DRIP IRRIGATION
1. THE CONTRACTOR MUST BE QUALIFIED TO INSTALL DRIP IRRIGATION EQUIPMENT AND MUST ARRANGE AND SCHEDULE A PRE-CONSTRUCTION MEETING WITH BOTH THE LANDSCAPE ARCHITECT AND THE DRIP EQUIPMENT MANUFACTURER PRIOR TO ANY INSTALLATIONS.

2. THE CONTRACTOR SHALL PRACTICE CAUTION WHEN INSTALLING DRIP IRRIGATION EQUIPMENT. ALL MANUFACTURERS ILLUSTRATIONS, DIRECTIONS, INSTRUCTIONS, RECOMMENDATIONS, WRITTEN LITERATURE AND VIDEO TAPE ILLUSTRATIONS SHALL BE FOLLOWED.

3. PVC SHAVINGS AND BURRS WILL NOT BE TOLERATED IN THE SYSTEM. ALL PVC PIPE SHALL BE CUT WITH THE APPROPRIATE PVC PIPE CUTTERS. USE OF ANY TYPE OF SAW FOR CUTTING PVC PIPE IS NOT ACCEPTABLE. THE CONTRACTOR SHALL BE RESPONSIBLE FOR ALL DEBRIS INTRODUCED INTO THE SYSTEM DURING CONSTRUCTION AND SUBSEQUENT MAINTENANCE PERIOD.

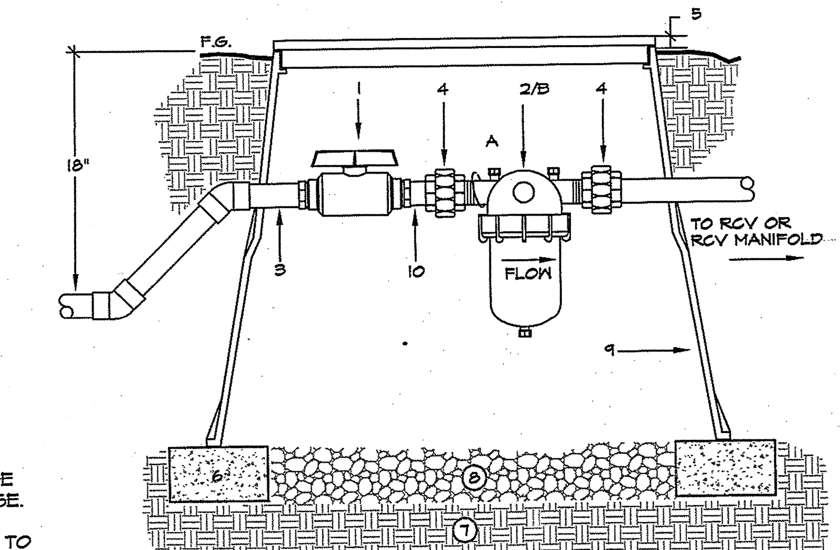

1- BALL VALVE ONE SIZE LARGER THAN FILTER. W/REDUCING BUSHINGS.
2- 3/4" OR 1" DISC FILTER SEE NOTES FOR SIZING.
3- PVC PRESSURE LINE - SEE SPECS.
4- 1" SCH 80 UNION - 5 X T - TYP.
5- FLUSH IN TURF. 1" IN GROUND COVER.
6- BRICK SUPPORT - 1 AT EA. CORNER.
7- UNDISTURBED OR COMPACTED SUB-GRADE.
8- PEA GRAVEL SUMP 3" DEEP.
9- 17" X 18" VALVE BOX. CARSON MODEL #1419-18 OR EQUAL.
10- PVC PIPE-LINE SIZE

NOTE:
A. R.W. WARNING IF REQ.
B. ARRANGE FILTER AND UNIONS FOR DISASSEMBLY & MAINTENENCE ACCESS.
C. FOR FLOWS LESS THAN 10 GPM USE 3/4" DFV075-140.
D. FOR FLOWS 11 TO 20 GPM USE 1" DF100-140 - BOX EXTENSION REQ.
E. FOR FLOWS 21 TO 40 GPM USE DF150L-140 1-1/2" LONG.

K — BALL VALVE W/ FILTER — SECTION - NO SCALE
D_FLTR-SPEC.dwg

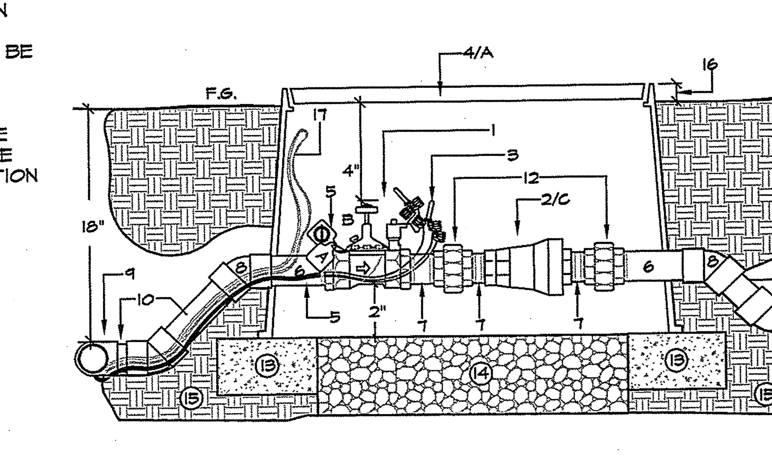

1- REMOTE CONTROL VALVE.
2- PRESSURE REGULATING VALVE- SEE NOTE BELOW FOR SIZE.
3- WATERPROOF WIRE SPLICE.
4- VALVE BOX W/PURPLE LOCKING LID.
5- CONTROL WIRES- STATION WIRE AND COMMON
6- PVC SCH 80 NIPPLE -TOE- L.A.R.
7- PVC SCH 80 NIPPLE -TBE- L.A.R.
8- PVC SCH 40 45DEG. ELL -TYP 4X.
9- PVC SCH 80 TEE ON MANIFOLD
10- PVC PRESSURE PIPE
11- PVC NON-PRESSURE PIPE
12- PVC SCH 80 UNION (VALVE SIZE).
13- BRICK OR CONCRETE SUPPORTS- ONE AT EACH CORNER
14- PEA GRAVEL SUMP, 3" DEEP MIN.
15- UNDISTURBED/COMPACTED SUBGRADE.
16- FLUSH IN TURF, 1" IN GROUNDCOVER.
17- SPARE STATION WIRES LOOPED INTO EACH VALVE BOX ON RUN.

NOTES:
A. VALVE BOX LID SHALL BE BRANDED AS SHOWN IN VALVE BOX INSTALLATION AND IDENTIFICATION DETAIL DRAWING.
B. CONTRACTOR SHALL INCLUDE A CHRISTY'S R.W. WARNING TAG AND IRRIGATION I.D. TAG INDICATING CONTROLLER AND STATION NUMBER. TAGS SHALL BE ATTACHED TO VALVE BONNET BOLT.
C. SIZE ACCORDING TO FLOW AS FOLLOWS:
FOR FLOWS TO 0.5-8 G.P.M. USE 3/4" PMR-30 LF.
FOR FLOWS OF 9-16 G.P.M. USE 1" PMR-30 MF.
FOR FLOWS 17-25 G.P.M. USE 1-1/4" PMR-30 HF.
FOR FLOWS 26-40 G.P.M. USE TWO 1-1/4" PMR-30 HF PLUMBED IN PARALLEL.

I — REMOTE CONTROL VALVE W/PRV FOR DRIP IRRIGATION — SECTION - NO SCALE
RCV-SEN-REG-RW.dwg

SADDLEBACK COLLEGE

gkkworks
2355 Main Street Suite 220
Irvine | CA 92614
949 250 1500
949 955 2708 fax

Architect Seal
LICENSED ARCHITECT — MATTHEW S. GREINER — C-27137 — 10.31.09 RENEWAL DATE — STATE OF CALIFORNIA

Consultant and Seal
FONG HART SCHNEIDER + PARTNERS
Landscape Architecture . Planning . Urban Design
930 W. 16th Street, A2
Costa Mesa, California 92627-4337
Tel: 949 645 9444
Fax: 949 645 1605
REGISTERED LANDSCAPE ARCHITECT — DAVID E. SCHNEIDER — No. 3357 — REN. 3-31-07 — STATE OF CALIFORNIA

Agency Approval
IDENTIFICATION STAMP
DIV. OF THE STATE ARCHITECT
APPL. # 04-109129
AC ___ FLS ___ SS ___
DATE MAY 0 7 2008

No.	Date	Revision/Issue
	11/01/07	DSA Submittal #1

Project Name
JAMES B. UTT MEMORIAL LEARNING RESOURCE CENTER RENOVATION
28000 Marguerite Parkway
Mission Viejo, California 92692

Checked By | Drawn By

Sheet Title
LANDSCAPE IRRIGATION DETAILS

L-2.02

Project Number: 04-111 | Scale: NONE

© 2008 gkkworks, All Rights Reserved
NO PART OF THE CONTENTS OF THIS DOCUMENT MAY BE REPRODUCED OR TRANSMITTED IN ANY FORM OR BY ANY MEANS WITHOUT THE WRITTEN PERMISSION OF GKKWORKS.