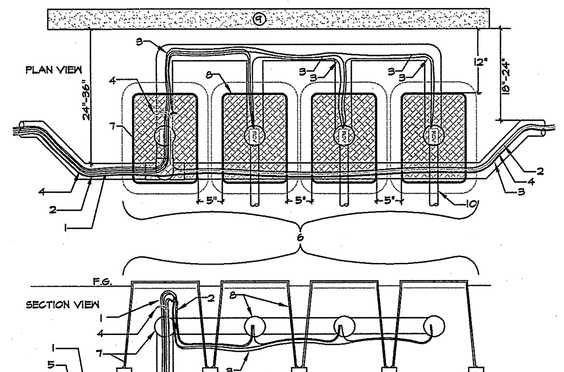

1- CONTROLLER STATION WIRES
2- CONTROLLER COMMON WIRE
3- STATION WIRES ON CONTINUED RUN
4- SPARE STATION WIRES
5- MAINLINE RUN.
6- RCV MANIFOLD
7- MANIFOLD ISOLATION VALVE AND STANDARD REC'T. VALVE BOX.
8- REMOTE CONTROL VALVE AND STANDARD REC'T. VALVE BOX.
9- EDGE OF AREA, CURB OR WALL.
10- LATERAL RUN -TYP-.

NOTES:
A- CONTROL WIRES ARE DIRECT BURIAL, SINGLE CONDUCTOR, SOLID COPPER.
B- STATION WIRE TO BE 14 GAUGE COMMON WIRE TO BE 14 GAUGE OR 12 GAUGE SEE SPECIFICATIONS.
C- SPARE WIRES TO BE EQUAL TO THE ABOVE.
D- ALL WIRE TO PASS THROUGH THE ISOLATION VALVE BOX.

L WIRING AT REMOTE CONTROL VALVE MANIFOLD

PLAN - NO SCALE

V_RCV-MAN.dwg

IDENTIFICATION GUIDE

POTABLE WATER	RECLAIMED WATER	ABBREVIATION	DESIGNATION
DW	RW	A	IRR CONN (STATION #)
DW	RW	A	HV
DW	RW	A	FS
DW	RW	A	GV
DW	RW	A	FI
DW	RW	A	BS
DW	RW	A	MS
DW	RW	A	FB
DW	RW	A	GC
DW	RW	A	FVA
DW	RW	A	SLV
DW	RW	A	BO
DW	RW	A	DV
DW	RW	A	AV
DW	RW	A	DF

CONTACT IRRIGATION CONSULTANT FOR INFO ON ANY DEVICE IN A BOX NOT LISTED.

COMMUNICATION SPLICES
REMOTE CONTROL VALVES
MASTER CONTROL VALVES
FLOW SENSORS
GATE VALVES
FERTILIZER INJECTORS
BASKET STRAINERS
MOISTURE SENSORS
PULL BOX
QUICK COUPLERS
FLUSH VALVE ASSEMBLY
SLEEVE MARKER
BLOW-OUT (MAINLINE)
DRAIN VALVE
AIR/VACUUM RELIEF
DISK FILTER

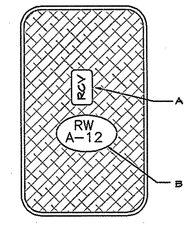

SAMPLE:
RECYCLED WATER SYSTEM OF CONTROLLER "A"
REMOTE CONTROL VALVE ON STATION 12.

NOTES:
A- VALVE BOXES SHALL BE LABELED BY HOT IRON BRANDING OR ALUMINUM ASPHALTIC BASE WATER-PROOF PAINT. IN ADDITION, LABEL INSIDE SURFACE OF EACH VALVE BOX WITH PERMANENT BLACK MARKER OR PAINT.
B- CONTROL VALVES SHALL BE INSTALLED TO ALLOW ORDERLY ARRANGEMENT OF VALVE BOXES.
C- LOCATE VALVE ASSEMBLIES IN SHRUB OR GROUND COVER AREAS WHEN POSSIBLE.
D- LOCATION OF VALVE ASSEMBLIES SHALL BE STAKED FOR APPROVAL BY LANDSCAPE ARCHITECT PRIOR TO INSTALLATION.
E- CENTER VALVE BOXES OVER VALVE ASSEMBLE TO FACILITATE ACCESS AND MAINTENANCE.
F- SET VALVE BOXES AT EQUAL ELEVATIONS WITH TOPS AT FINISH GRADE IN TURF AREAS OR 1" ABOVE FINISH GRADE IN SHRUB/ GROUND COVER AREAS.
G- VALVE BOXES SHALL BE SET PARALLEL TO EACH OTHER AND PERPENDICULAR TO EDGE OF AREA.
H- DO NOT DEFORM OR COLLAPSE VALVE BOX BY EXCESSIVE SOIL COMPACTION AROUND BOX.
I- SEE ALSO INDIVIDUAL VALVE INSTALLATION DETAILS.
J- ALL SPRAY HEADS, VALVE BOXES AND QUICK COUPLING VALVES SHALL BE CLEARLY COLORED (PURPLE) TO INDICATE THE USE OF RECYCLED WATER.

M VALVE BOX IDENTIFICATION AND INSTALLATION

SECTION - NO SCALE

V_RCV_BOX-ID-COM.dwg

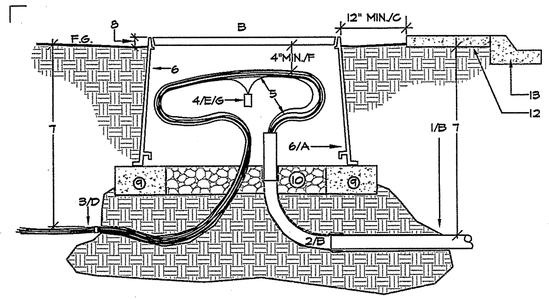

1- PVC SCH 40 OR 80 SLEEVE.
2- 90 DEG. SWEEP ELL
3- CONTROL WIRES.
4- WATER PROOF WIRE CONNECTORS FOR SPLICED CONNECTION
5- EXPANSION LOOPS- LABEL WIRES WITH CONTROLLER AND STATION #.
6- 6/12" x 18" VALVE BOX.
7- 18" MINIMUM- SEE SPECS. AND TRENCH DETAIL FOR DEPTHS.
8- FLUSH IN TURF. 1" IN GROUND COVER.
9- BRICK SUPPORT- ONE EACH CORNER
10- 6" DEEP PEA GRAVEL SUMP.
11- UNDISTURBED OR COMPACTED SUB-GRADE.
12- SIDEWALK
13- CURB AND GUTTER

NOTE:
A. INSTALL FULL BOXES AS SHOWN ON PLANS, AT ALL STREET CROSSINGS AND OTHER PAVING CROSSINGS IN EXCESS OF 20 FEET. CONDUIT AND SWEEP ELL APPLY ONLY TO PAVING CROSSING.
B. FULL BOX COVER SHALL BE PERMANENTLY MARKED AND LOCATED AS SHOWN IN VALVE BOX ID DETAIL DRAWING.
C. CONDUCTORS FOR EACH CONTROLLER CLOCK SHALL BE HARNESSED SEPARATELY AND AT SUFFICIENT INTERVALS TO MAINTAIN A DEFINITE BUNDLE.
D. ALL SPARE WIRE ENDS SHALL BE INSULATED IN THE SAME MANNER AS WIRE SPLICES.
E. WIRE BUNDLES INSIDE FULL BOXES SHALL BE AT LEAST 4" FROM THE UNDER SIDE OF THE BOX COVER. MINIMUM SIZE FULL BOX SHALL BE AS SHOWN ABOVE. LARGER
F. BOXES AND/OR EXTENSIONS MAY BE NECESSARY TO MEET THE 4" CLEARANCE REQUIREMENT.
G. LOOP CONTROL WIRES INTO FULL BOX. ALL SPLICES ARE TO BE MADE IN FULL BOXES OR REMOTE CONTROL VALVE BOXES.

N FULL BOX

SECTION - NO SCALE

P_FBOX.dwg

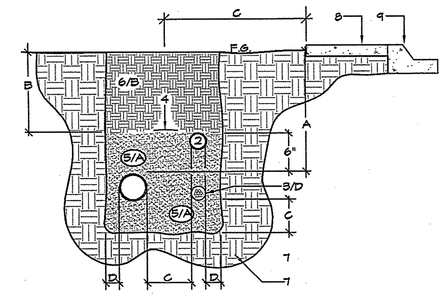

DIMENSION	A	B	C	D
1/2" TO 2-1/2"	18"	12"	6"	3"
3" TO 6"	24"	X	6"	3"

1- RJV. IRRIGATION MAINLINE
2- RJV. IRRIGATION LATERAL LINE
3- CONTROL WIRES
4- RJV. WARNING TAPE- 3" WIDE
5- SAND BEDDING- PER CITY OF CHULA VISTA STANDARDS.
6- CLEAN BACKFILL- APPROVED NATIVE SOIL.
7- UNDISTURBED NATIVE SOIL
8- SIDEWALK
9- CURB AND GUTTER

NOTE:
A. PRESSURE MAINLINE SHALL BE INSTALLED ON A 6" SAND BED & COVERED BY A 6" OF SAND PRIOR TO ANY OTHER BACKFILL MATERIAL.
B. SEE SPECIFICATIONS FOR APPROVED BACKFILL AND OTHER REQUIREMENTS.
C. IRRIGATION PIPE LINES SHOWN DIAGRAMMATICALLY. PIPE SHALL BE INSTALLED 18" BEHIND WALK OR CURB.
D. PIPE AND WIRE TO BE INSTALLED IN SLEEVES UNDER ALL PAVING AND EXTEND 12" PAST EDGE OF PAVING.
SLEEVES TO BE:
-30"TO 36" COVER UNDER ROADS AND DRIVES.
-18" TO 24" COVER UNDER WALKS.

01 TRENCHING

P_ SG-RJV.dwg

SECTION - NO SCALE

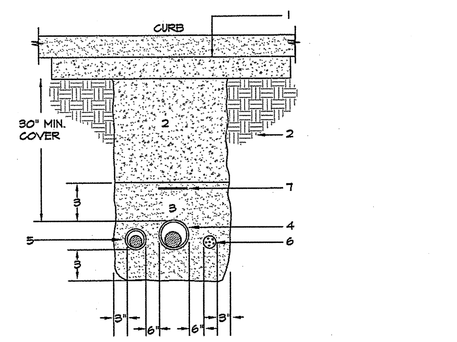

1- PAVING SURFACE BY OTHERS.
2- REFER TO ENGINEER FOR SPECIFIC MATERIAL AND COMPACTION REQUIREMENTS.
3- SAND BEDDING-PER CIVIL ENG. REQUIREMENTS
4- PRESSURE MAIN LINE W/ SLEEVE.
5- LATERAL LINE WITH SLEEVE.
6- LOW VOLTAGE CONTROL WIRES W/ CONDUIT- SIZE AS REQUIRED.
7- WARNING TAPE - 3" WIDE

THIS DRAWING SHOWS RELATIVE PIPE DEPTHS AND SLEEVE MARKING ONLY. BACKFILL MATERIAL, COMPACTION REQUIREMENTS, ROAD BED REQUIREMENTS SHALL BE ACCORDING TO CIVIL PLANS.

NOTE:
A. ALL SLEEVES TO BE PVC SCH 40 PIPE.
B. USE RECLAIMED WATER IDENTIFICATION PURPLE PIPE FOR ALL SLEEVES.
C. ALL SLEEVES TO BE SIZED TWICE THE DIA. OF THE PIPE (2" MIN.)
D. ALL SLEEVES TO RUN A MIN. OF 12" TO 18" BEYOND HARDSCAPE EDGES.
E. SLEEVE ENDS SHALL BE MARKED WITH 10" ROUND VALVE BOX. SEE ALSO SLEEVE MARKER DETAIL DRAWING.

02 PIPE AND WIRE UNDER PAVING

SECTION - NO SCALE

P_SG-PAV.dwg

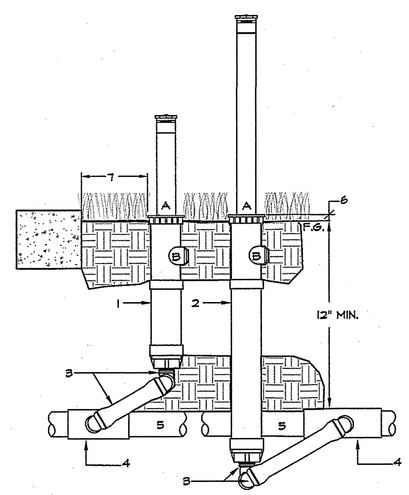

1- 6" POP-UP SPRAY HEAD
2- 12" POP-UP SPRAY HEAD.
3- MANUFACTURED SWING JOINT- HUNTER SWING JOINT MODEL #SJ-512 OR RAINBIRD MODEL # SA-125050.
4- PVC SCH 40 TEE-SST OR EL-ST.
5- PVC NON-PRESSURE LATERAL.
NOTE:
A. RECYCLED WATER WARNING CAP.
B. DO NOT USE SIDE INLET.
6- AT FINISH GRADE IN TURF; 1" IN SHRUB AREA.
7- DISTANCE FROM WALLS:
4' RAD. HEAD = 5"
6' TO 10' RAD. HEAD = 6"
12' TO 18' RAD. HEAD = 8"
OTHER HARDSCAPE = 5".

P1 POP-UP SPRAY HEAD

SECTION - NO SCALE

S_SP-POP-SECPVB

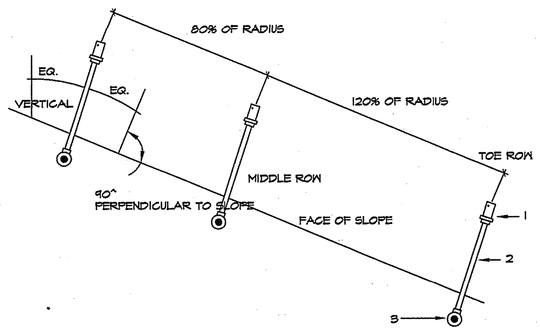

1- SPRINKLER HEAD AND CHECK VALVE.
2- PVC SCH 80 RISER.
3- PVC LATERAL.

NOTE:
A. ANGLE OF HEAD AND RISER ASSEMBLY TO BE BETWEEN VERTICLE AND PERPENDICULAR TO SLOPE. THIS IS A GENERAL RULE AND ADJUSTMENTS MAY BE NECESSARY IN THE FIELD DEPENDING ON ANGLE OF SLOPE AND PERFORMANCE OF SPRINKLER. THE INTENTION IS TO MAXIMIZE UNIFORMITY OF COVERAGE.
B. RELATIVE LATERAL SPACING ON SLOPE WITH THE MIDDLE ROW, OR ROWS CLOSER TO THE TOP OF SLOPE THAN THE TOE. THIS APPLIES TO ALL MIDDLE ROW LATERALS, BUT AS A UNIT. THE SPACINGS BETWEEN ALL MIDDLE ROW LATERALS IS TO BE UNIFORM AND ALL ARE TO BE ADJUSTED UP THE SLOPE EQUALLY.

Q HEAD ANGLE AND PLACEMENT FOR SLOPE CONDITION

SECTION - NO SCALE

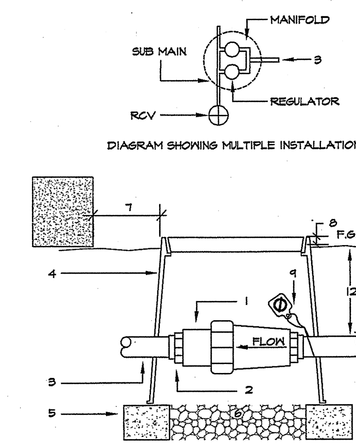

1- REGULATOR OR CHECK VALVE.
2- PVC SCH 40 MALE ADAPTER.
3- PVC LATERAL.
4- 6" ROUND VALVE BOX.
5- BRICK SUPPORTS - TWO.
6- PEA GRAVEL SUMP 3" DEEP.
7- 12" FROM WALL OR PAVING.
8- FLUSH IN TURF, 1" IN GROUND COVER.
9- RJV. WARNING TAG IF REQ.

J IN-LINE CHECK VALVE OR REGULATOR ON LATERAL

SECTION - NO SCALE

V_CHK.dwg

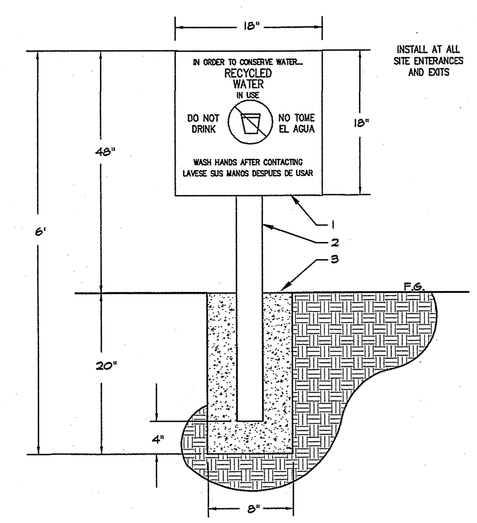

1- RECYCLED WATER WARNING SIGN. T.CHRISTY'S ENTERPRISES MODEL# ID-SIGN-1818
2- GALVENIZED STEEL POST OR U-CHANNEL
3- CONCRETE FOOTING

Z RECYCLED WATER WARNING SIGN

SECTION - NO SCALE

RW_IDR-WARNING-SIGN.dwg

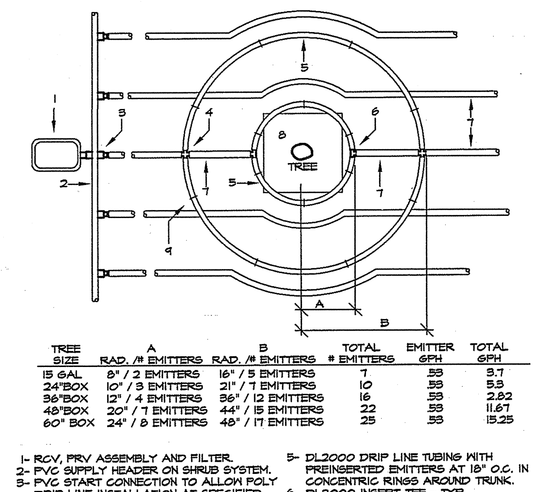

TREE SIZE	A RAD. /# EMITTERS	B RAD. /# EMITTERS	TOTAL # EMITTERS	EMITTER GPH	TOTAL GPH
15 GAL	8' / 2 EMITTERS	16' / 5 EMITTERS	7	.53	3.7
24"BOX	10' / 3 EMITTERS	21' / 7 EMITTERS	10	.53	5.3
36"BOX	12' / 4 EMITTERS	26' / 12 EMITTERS	16	.53	2.52
48"BOX	20' / 7 EMITTERS	44' / 15 EMITTERS	22	.53	11.67
60" BOX	24' / 8 EMITTERS	48' / 17 EMITTERS	25	.53	13.25

1- RCV, PRV ASSEMBLY AND FILTER.
2- PVC SUPPLY HEADER ON SHRUB SYSTEM.
3- PVC START CONNECTION TO ALLOW POLY DRIP LINE INSTALLATION AT SPECIFIED DEPTH - SEE MANIFOLD DETAIL.
4- DL2000 INSERT CROSS - TYP.
5- DL2000 DRIP LINE TUBING WITH PREINSERTED EMITTERS AT 18" O.C. IN CONCENTRIC RINGS AROUND TRUNK.
6- DL2000 INSERT TEE - TYP.
7- BLANK TUBING.
8- TREE ROOTBALL.
9- SECURE DRIPLINE TO SUBGRADE WITH JUTE-NET STAPLES 9' O.C.

NOTE:
POLY DRIPLINE TO BE INSTALLED ON SUBGRADE WITH 3" TO 4" TOPSOIL COVER. SEE LANDSCAPE PLANTING PLANS AND SPECS. FOR ADDITIONAL DEEP WATER TO TREES PLANTED IN SHRUB AND GROUND COVER AREAS RINGS TO BE CONNECTED TO SHRUB AND GROUND COVER DRIP LINES.

V4 DRIP LAYOUT WITH PREINSERTED EMITTERS TREE IN GROUND COVER SAME ZONE

SECTION - NO SCALE

D_LT-TR2-TORO.dwg

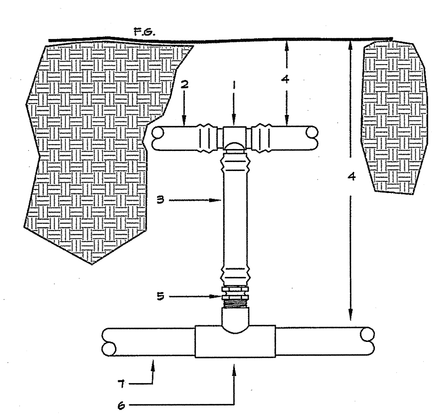

1- DL2000 INSERT TEE OR ELL.
2- DL2000 DRIPLINE- SEE SPECS & LEGEND.
3- BLANK POLY TUBING.
4- SEE SPECS FOR DEPTH.
5- DL2000 3/4" MALE ADAPTER.
6- PVC TEE - 3x3x3/4" THREADED.
7- PVC PIPING INLET OR EXHAUST MANIFOLD.

S START CONNECTION PVC TO POLY SUB-GRADE

SECTION - NO SCALE

D_ST-PVC-SG-TORO.dwg

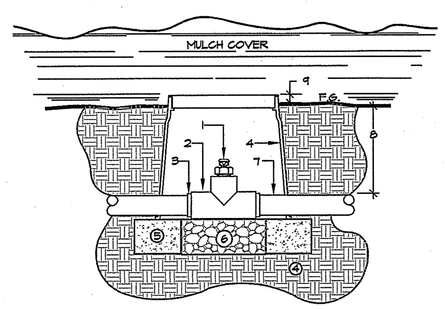

1- TORO DL 2000 AIR/VACUUM RELIEF VALVE- YD-500-34.
2- PVC SCH 40 TEE -3x3x7
3- TORO DL2000 COMP. ADPTR.- CATIO.
4- 10" ROUND VALVE BOX.
5- BRICK SUPPORTS - TWO.
6- PEA GRAVEL SUMP 3" DEEP.
7- POLY DRIPLINE OR BLANK TUBING.
8- SEE NOTES AND SPECS. FOR DEPTH.
9- FLUSH IN TURF, 1" IN GROUND COVER.

NOTE:
A. AIR/VAC TO BE INSTALLED ON A MANIFOLD AT HIGHEST LOCAL ELEVATION.
B. THREAD AIR VACUUM RELIEF VALVE INTO ADAPTOR TEE WITH TEFLON TAPE.
C. NOTCH SIDE OF BOX FOR UNDISTURBED LINE ACCESS.
D. PROVIDE CONT. SUPPORT OF TUBING & AIR/VAC VALVE.

T AIR/VACUUM RELIEF ON POLY SUB-GRADE

SECTION - NO SCALE

D_AVAC-SG-TORO.dwg

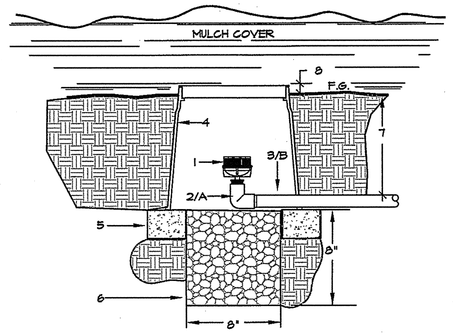

1- NETAFIM TLOSOMFV LINE FLUSH VALVE.
2- PVC SCH 40 SXT ELL WITH COMPRESSION ADAPTER CATIO IF NEEDED FOR POLY TUBING.
3- POLY LATERAL END OR PVC MANIFOLD
4- 10" ROUND VALVE BOX.
5- BRICK SUPPORTS - TWO.
6- 8" DIA POLY DRAINLINE PIPE SECTION 8' LONG FILLED W/ PEA GRAVEL.
7- SEE NOTES AND SPECIFICATIONS. FOR PIPE DEPTH
8- FLUSH IN TURF, 1" IN GROUND COVER.

NOTES:
A. IN THE CASE OF POLY LATERAL END OR FLUSH MANIFOLD COMPRESSION ADAPTER WILL BE NEEDED. NO COMPRESSION ADAPTER IS REQUIRED WHERE A PVC FLUSH MANIFOLD IS USED.
B. PVC SCH 40 OR POLYETHYLENE LATERAL LINE OR FLUSH MANIFOLD.

U END FLUSH SUB-GRADE

SECTION - NO SCALE

D_END-SG-TORO.dwg

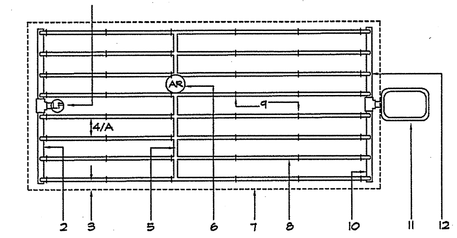

1- FLUSHING VALVE PLUMBED TO PVC OR POLY EXHAUST MANIFOLD.
2- PVC OR POLY EXHAUST MANIFOLD.
3- PERIMETER LATERALS SPACING- MIN. 4' - MAX. 1/2 LATERAL SPACING.
4- INTERIOR LATERAL SPACING TO BE AS NOTED IN THE LEGEND AND PLANS.
5- BLANK TUBING MANIFOLD FOR AIR VAC RELIEF - CENTERED ON MOUND OR BERM.
6- AIR/VACUUM RELIEF VALVE - INSTALL AT HIGHEST LOCAL ELEVATION.
7- AT HIGHEST LOCAL ELEVATION.
8- AREA PERIMETER / EDGE OF PLANTER. DRIP TUBING LATERAL LINE.
9- SECURE POLY LINES WITH JUTE NET
10- STAPLES, OR EQUAL 5' O.C. PVC OR POLY SUPPLY MANIFOLD.
11- REMOTE CONTROL VALVE WITH DISC FILTER AND PRV.
12- START CONNECTION AS APPROPRIATE- SEE OTHER DETAILS.

NOTE:
A. DRIP-LINES TO BE PLACED IN PARALLEL LINES EQUALLY AND UNIFORMLY SPACED FOR ENTIRE LENGTH OF RUN. SPACE LINES AS SHOWN AND/OR NOTED ON DRAWINGS AND SPECS.
B. SEE TORO "SUBSURFACE IRRIGATION DESIGN" GUIDE FOR ADDITIONAL INFORMATION.
C. DRIP-LINES TO BE LAYED FLAT AND SECURED TO SUBGRADE OR FINISH GRADE, WITH STAPLES AT 5' ON CENTER PRIOR TO BACK-FILL OR MULCH COVER.
D. USE CAUTION WHEN SECURING DRIP-LINE WITH STAPLES. DRIP-LINE SHALL NOT BE OBSTRUCTED OR KINKED.

V1 DRIP SYSTEM LAYOUT FOR RECTILINEAR AREA

SECTION - NO SCALE

D_LT-GEN1-TORO.dwg

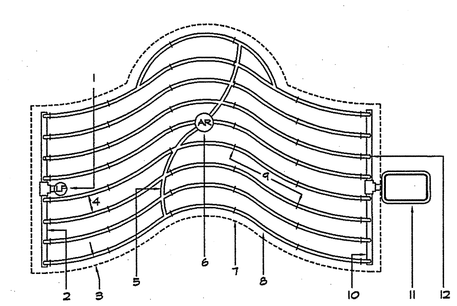

1- FLUSHING VALVE PLUMBED TO PVC OR POLY EXHAUST MANIFOLD.
2- PVC OR POLY EXHAUST MANIFOLD.
3- PERIMETER LATERALS SPACING- MIN. 4' - MAX. 1/2 LATERAL SPACING.
4- INTERIOR LATERAL SPACING TO BE AS NOTED IN THE LEGEND AND PLANS.
5- BLANK TUBING MANIFOLD FOR AIR VAC RELIEF.
6- AIR/VACUUM RELIEF VALVE - INSTALL AT HIGHEST LOCAL ELEVATION.
7- AREA PERIMETER / EDGE OF PLANTER.
8- DRIP TUBING LATERAL LINE.
9- SECURE POLY LINES WITH JUTE NET STAPLES, OR EQUAL 5' O.C.
10- PVC OR POLY SUPPLY MANIFOLD.
11- REMOTE CONTROL VALVE WITH DISC FILTER AND PRV.
12- START CONNECTION AS APPROPRIATE SEE OTHER DETAILS.

NOTE:
A. DRIP-LINES TO BE PLACED IN PARALLEL AND CONCETRIC LINES EQUALLY AND UNIFORMLY SPACED FOR ENTIRE LENGTH OF RUN. SPACE LINES AS SHOWN AND/OR NOTED ON DRAWINGS AND SPECS.
B. SEE TORO "SUBSURFACE IRRIGATION DESIGN" GUIDE FOR ADDITIONAL INFORMATION.
C. DRIP-LINES TO BE LAID FLAT AND SECURED TO SUBGRADE WITH STAPLES AT 5' CENTERS PRIOR TO BACK-FILL OR MULCH COVER.
D. USE CAUTION WHEN SECURING DRIP-LINE WITH STAPLES. DRIP-LINE SHALL NOT BE OBSTRUCTED OR KINKED.

V2 DRIP SYSTEM LAYOUT FOR CURVILINEAR AREA

SECTION - NO SCALE

D_LT-GEN2-TORO.dwg

SADDLEBACK COLLEGE

gkkworks
2355 Main Street Suite 220
Irvine | CA 92614
949 250 1500
949 955 2708 fax

Architect Seal

LICENSED ARCHITECT MATTHEW S. GREINER C-29107 10-28-09 RENEWAL DATE STATE OF CALIFORNIA

Consultant and Seal

FONG HART SCHNEIDER - PARTNERS

Landscape Architecture . Planning . Urban Design

630 W. 19th Street, A2
Costa Mesa, California
92627-4237

Tel: 949 645 9444
Fax: 949 645 1605

REGISTERED LANDSCAPE ARCHITECT DAVID E. SCHNEIDER No. 3367 REN. 3-31-07 STATE OF CALIFORNIA

Agency Approval

IDENTIFICATION STAMP
DIV. OF THE STATE ARCHITECT
APPL. # 04-109129
AC. VW FLS. SV SS TB
DATE MAY 07 2008

No.	Date	Revision/Issue
	11/01/07	DSA Submittal #1

Project Name

JAMES B. UTT MEMORIAL LEARNING RESOURCE CENTER RENOVATION

28000 Marguerite Parkway
Mission Viejo, California 92692

Checked By | Drawn By

Sheet Title

LANDSCAPE IRRIGATION DETAILS

L-2.03

Project Number: 04-111
Scale: NONE

© 2008 gkkworks, All Rights Reserved
NO PART OF THE CONTENTS OF THIS DOCUMENT MAY BE REPRODUCED OR TRANSMITTED IN ANY FORM OR BY ANY MEANS WITHOUT THE WRITTEN PERMISSION OF GKKWORKS.

OR531777-51697 P1 S2 - R C CONSTRUCTION SERVICES - PG 013 OF 235 (P1 S2) 1 SET.TIF - 2/3/2010 - 15:34
T:\de-saddleback\fhsp\cds\sheets\fhsp-sbc-L203.dwg 03/31/2008